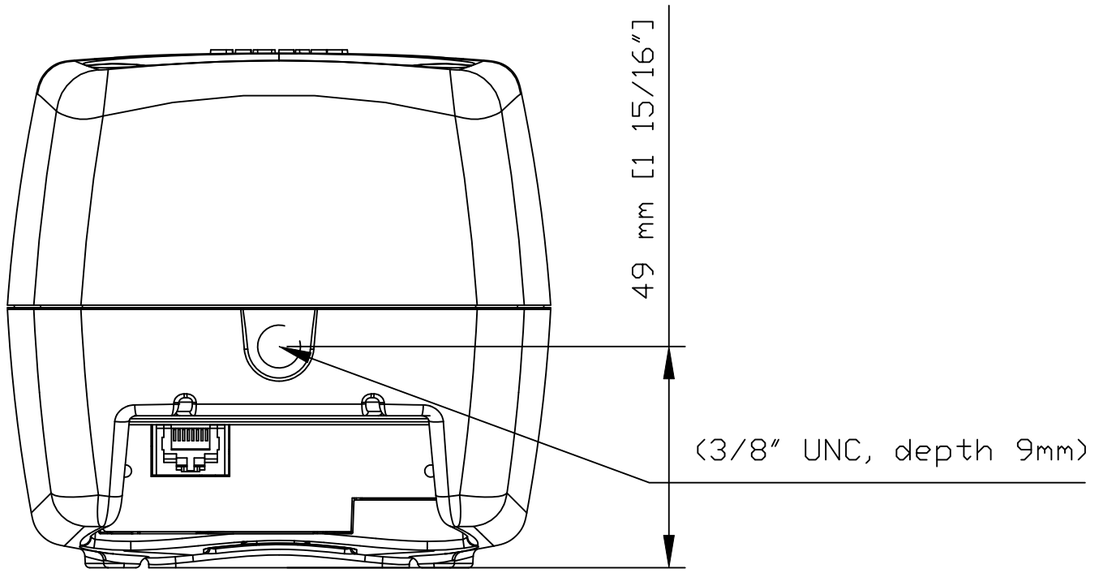
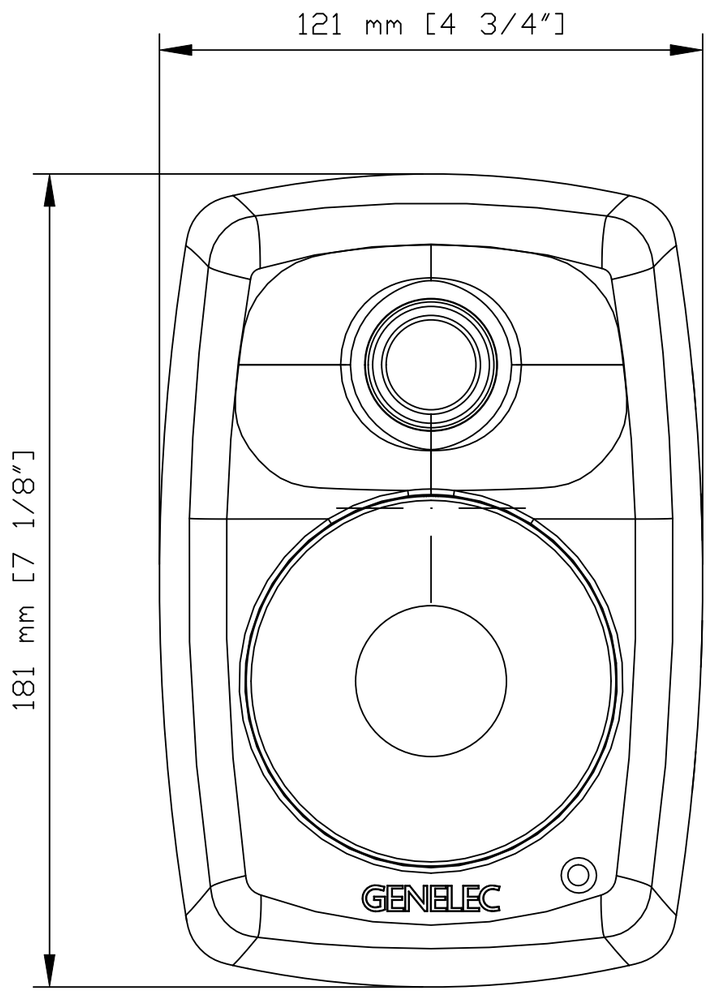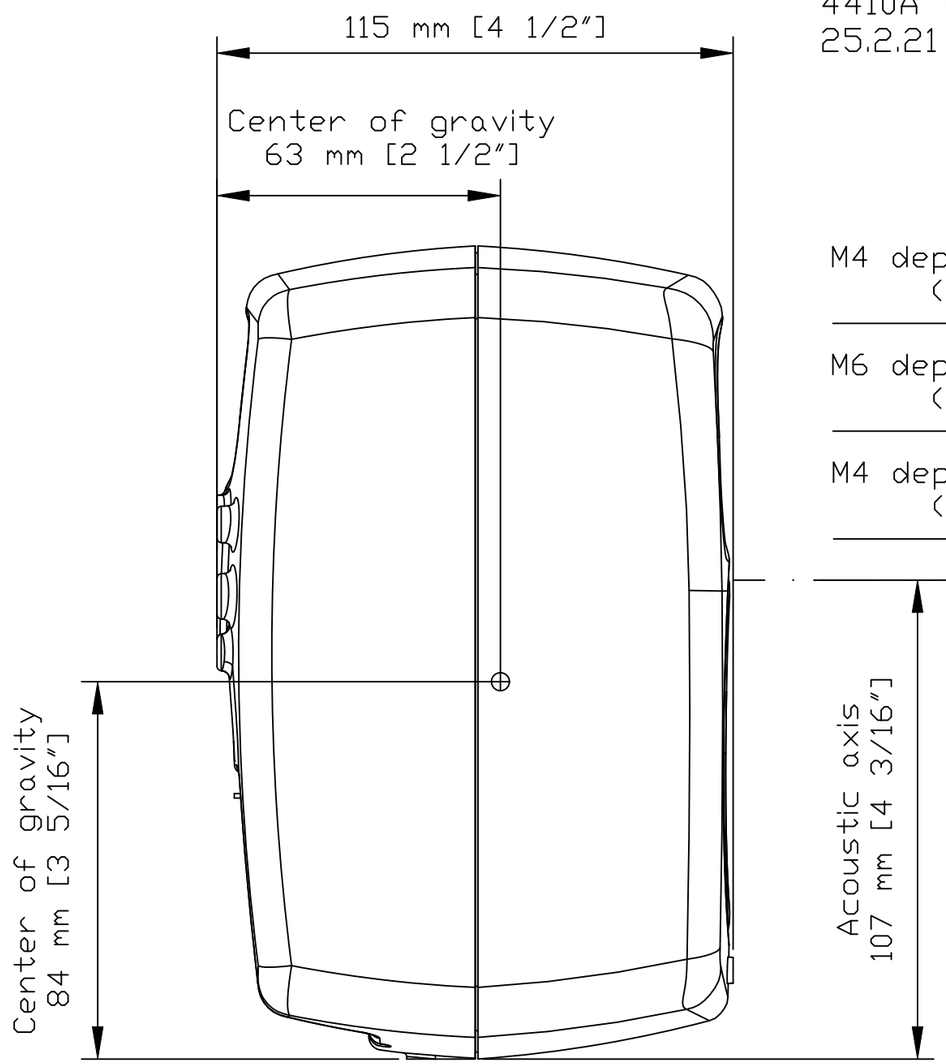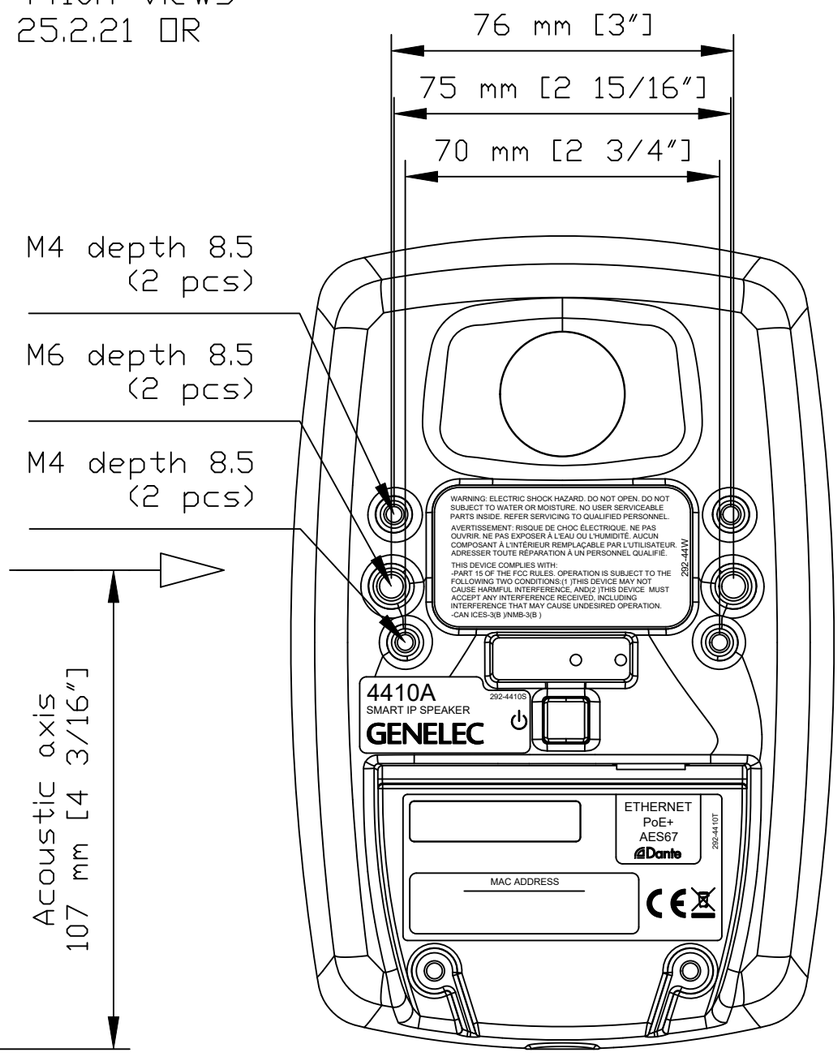
4410A views
25.2.21 DR