ORR1804_R01

yellobrik®

yellobrik® Quick Reference

Technical Specifications

Optical Input	4x fiber inputs 2x Duplex (singlemode) using LC/PC Connections		
	SMPTE 297M - 2006		
	Wavelength:	1260 to 1620nm (each channel)	
	RX Sensitivity:	ORR 1804 -18dBm	up to 3Gbit/s
		ORR 1804 HS -26dBm	up to 3Gbit/s
	4x RX active LED on side of module		
SDI Output	4x 3G-SDI outputs on 75 Ohm BNC connector (four independent channels)		
	SMPTE 424M, SMPTE 292M, SMPTE 259M		
	Multi-standard operation from 270Mbit/s to 3Gbit/s		
	Multi-rate reclocking: 270Mbit/s to 3Gbit/s		
	Electrical Return Loss:	to 1.5GHz: >15dB	to 3GHz: >10dB
	Automatic cable EQ:	1.5Gbit/s	3Gbit/s
		190m	140m
		Belden 1694A cable	
Power	+12V DC @ 1.5W excl. SFP - (supports 7 - 24V DC input range)		
	Power LED on side of module		
Physical	Size (incl.connectors)	140mm x 83.8mm x 22mm (5.51" x 3.29" x 0.86")	
	Weight	168g/6oz excl. SFPs, 268g/9.5oz incl. SFPs	
Ambient	5 - 40ºC (41 - 104ºF) 90% Humidity (non condensing)		
Model #	ORR 1804	EAN# 4250479529731	
	ORR 1804 HS	EAN# 4250480829899	
Includes	Module, 2x RR SFPs, Power Supply		

ORR 1804

4-Channel 3G-SDI Fiber Transmitter

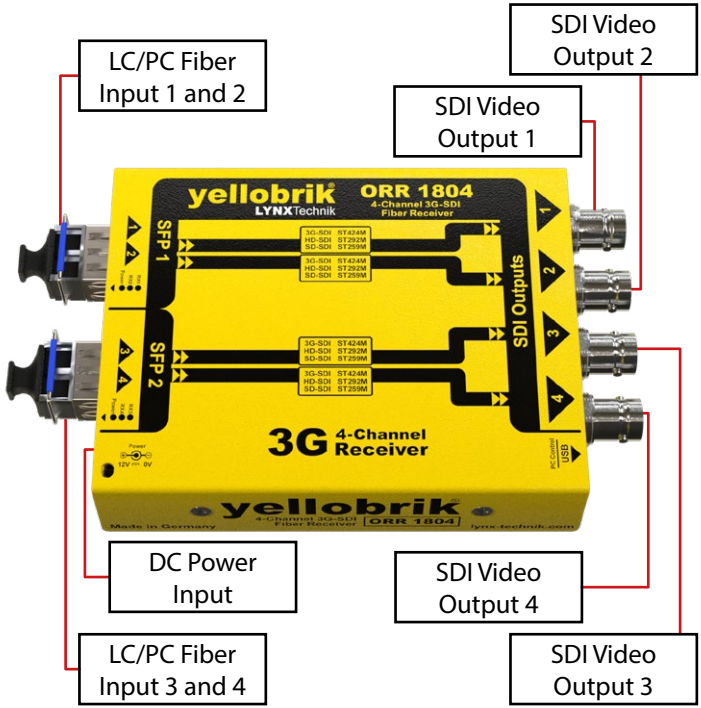

LYNXTechnik | Broadcast Television Equipment

Visit our website for the latest product updates: **www.lynx-technik.com**

Module laser is active as soon as power is connected, **regardless of LED indication**

Connections

Fiber connections use Duplex LC connectors. SDI video outputs connect to the 75 Ω BNC connectors.

Use the included dust plug to protect the optical connection from dust.

Operation

The ORR 1804 supports all SDI video formats from 270Mbit/s to 3Gbit/s. It does not support analog video formats. The module has four independent 3G-SDI channels.

Operation is fully automatic. The video input rates are automatically detected, reclocked and provided on the SDI (BNC) outputs. No user settings are provided for this module. The module supports hot swapping and hot plugging.

Module LEDs

Power LED

Green	Device Running
Yellow (blinking)	"Locate Module" function active
Red (blinking)	Hardware Issues
Off	Device Not Powered

RX LED

Green	Valid Signal Received
Green/Red (alternating)	Input Format Incompatible
Off	No Valid Signal Detected

Power

The module requires a 12V DC power input. The LED indicates when power is connected. If using an external power supply, a clean 7–24V DC source is required.

The ORR 1404 has a maximum power consumption of 1.5W (excluding SFPs).

Power Lead Strain Relief

Yellobrik modules have a small hole above the power connection to prevent the power lead from being accidentally pulled out. Secure the lead using the supplied tie-wrap as shown below.

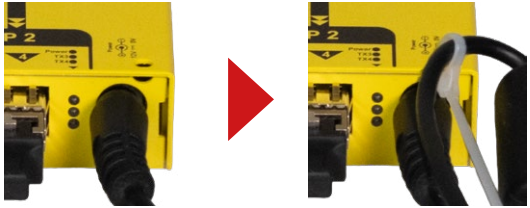

Optional Mounting Solutions

The optional RFR 1001 mounting bracket allows the module to be installed on any surface and 19" rack rails.

The RFR 1200 rack mount holds up to 14 yellobrik modules and provides power redundancy for all installed devices.