Product Information Sheet

MINI-PHOENIX CONNECTOR 3 PIN FEMALE

43-496 MINI-PHOENIX CONNECTOR 3 pin female

DESCRIPTION

Two-part terminal-strip connectors, smaller than the standard Phoenix connector. They are otherwise similar in features and application. The free part has screw terminals for the incoming cable and plugs into the fixed part built into the equipment. Most manufacturers using these connectors supply both parts of the connector with the equipment, but the free part is also offered separately for pre-wiring, testing or maintenance. Each connector has three pins and carries one audio circuit.

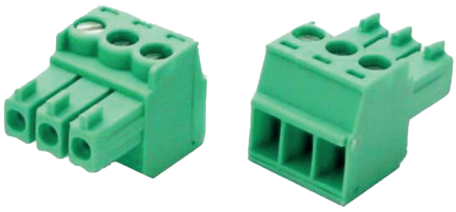

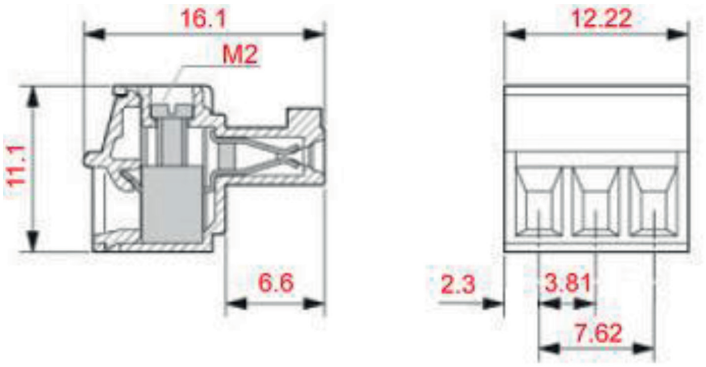

CONNECTION DATA

Conductor cross section solid	0.14 mm^2 - 1.5 mm^2
Conductor cross section stranded	0.14 mm^2 - 1.5 mm^2
Conductor cross section AWG/kcmil min.	28
Conductor cross section AWG/kcmil max	16
Minimum AWG according to UL/CUL	30
Maximum AWG according to UL/CUL	14
Tightening torque	0.22 Nm - 0.25 Nm

CERTIFICATES

Certification CB, CSA, CUL, GOST, UL, VDE-PZI

TECHNICAL SPECIFICATION

Range of articles	MC 1.5/..-ST
Insulating material group	I
Rated surge voltage (III/3)	2.5 kV
Rated surge voltage (III/2)	2.5 kV
Rated surge voltage (II/2)	2.5 kV
Rated voltage (III/2)	160 V
Rated voltage (II/2)	320 V
Connection in acc. with standard	EN-VDE
Nominal current IN	8 A
Nominal voltage UN	160 V
Nominal cross section	1.5 mm^2
Maximum load current	8 A (with 1.5 mm2 conductor cross section)
Insulating material	PA
Inflammability class acc. to UL 94	V0
Internal cylindrical gage	A1
Stripping length	7 mm
Nominal voltage, UL/CUL Use Group B	300 V
Nominal current, UL/CUL Use Group B	8 A
Nominal voltage, UL/CUL Use Group D	300 V
Nominal current, UL/CUL Use Group D	8 A